卷册检索号 SEARCH NO. OF THE VOLUME
MLHVDC-LCS-ECI-DD-CA-0216 30-B003701S-T0216

第 1 页 共 1 页
PAGE OF

图纸文件目录（首页）

CATALOG OF DRAWING DOCUMENTS (HEAD PAGE)

拉合尔±660kV换流站 工程 施工图 阶段
±660kV Lahore Converter Station PROJECT Detailed Design DESIGN STAGE

建筑 专业 第 02 卷 第 16 册
Architecture SPECIALITY VOLUME BOOK

卷册名称 备用平抗室建筑图（第一次修改）
Volume name Architectrual drawing of Standby smoothing reactor house(First revision)

批 准 APPROVED BY	
审 核 REVIEWED BY	
设计/勘测 DESIGNED BY/ SURVEYED BY	
图 纸 1 张 DRAWING NOS.	打印件 0 本 PRINTED COPIES NOS.

序号 No.	图 号 DRAWING NO.	文 件 名 称 DOCUMENT TITLE	版本 EDITION	张 NOS.	本 NOS.	备注 REMARKS
1	30-B003701S-T0216-001	备用平抗室建筑图 Architectrual drawing of Standby smoothing reactor house	B	1		

注： 本次升版图纸为001图。
The revised drawing is 001.

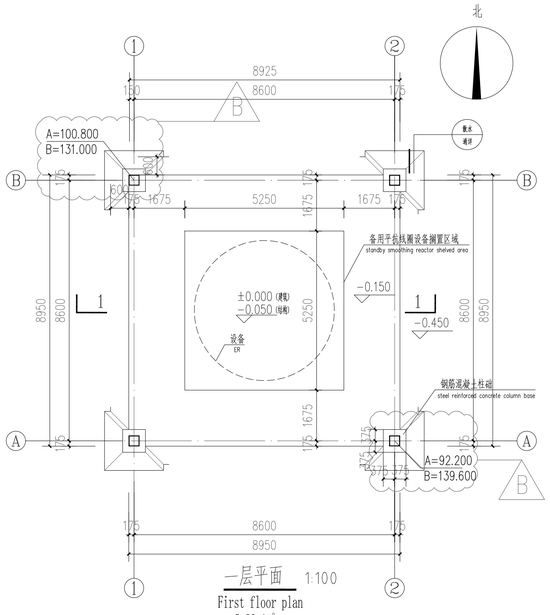

一层平面 1:100

First floor plan

S=80.1m²

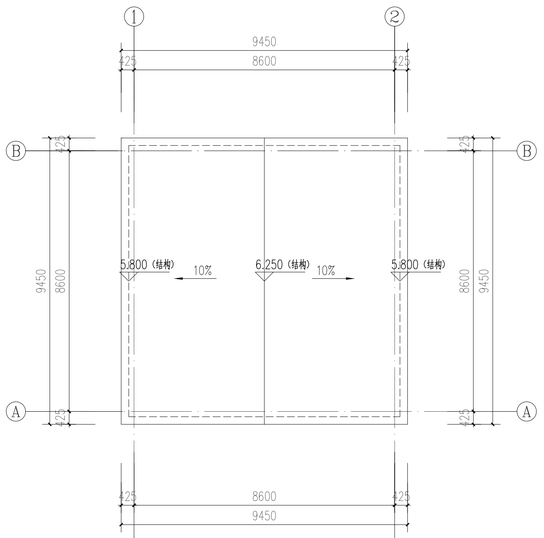

屋顶平面图 1:100

Roof plan

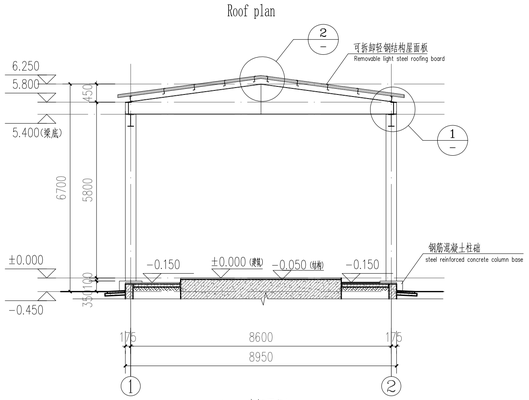

1-1剖面图 1:100

1-1 Section

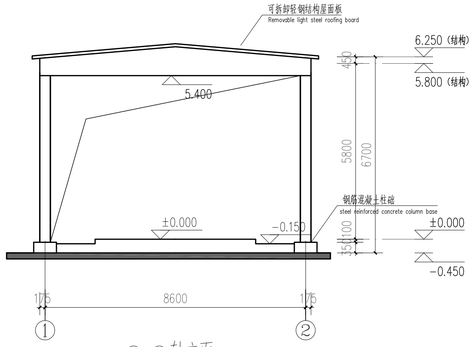

①-②轴立面 1:100

South elevation

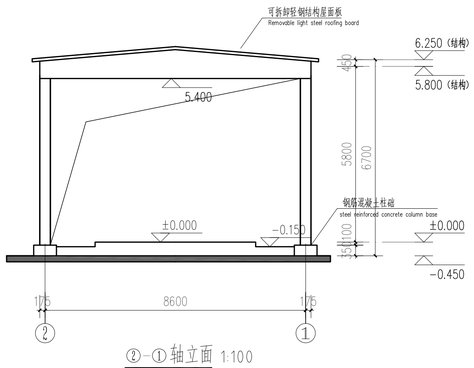

②-①轴立面 1:100

North elevation

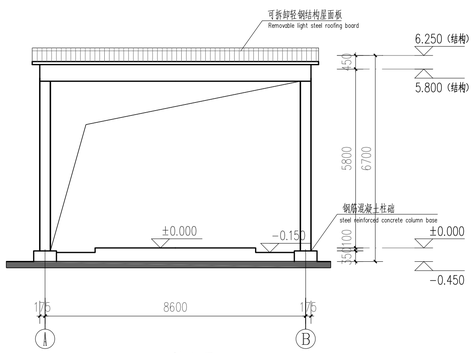

①-⑧轴立面 1:100

East elevation

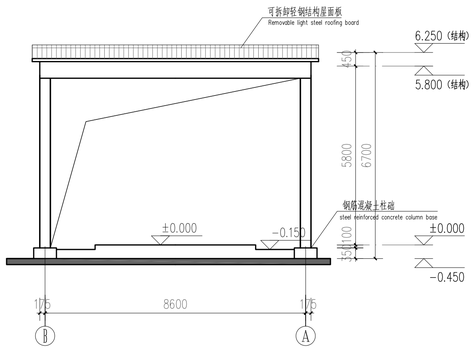

⑧-①轴立面 1:100

West elevation

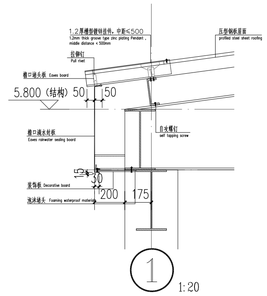

1 1:20

檐口位置

eaves position

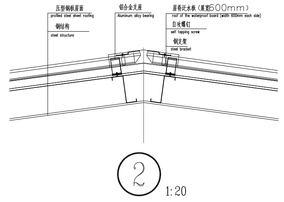

2 1:20

屋脊位置

ridge of roof position

Project Narrative

1.General

Project name：Standby smoothing reactor house from Matiari to Lahore in Pakistan

Development organization：State Grid / China Electric Power Equipment And Technology CO .TD

Design scope: The first Building Area / 1 buildings

Name	Building Story	Height	Area	Altitude intercept
standby smoothing reactor house (The first Building Area)	1	6.47	80.1	0.45

Structural style: steel structure　　Service life of structure: 50 years

Fire resistance rating: grade 2

2. Precautions of construction

1) The selection, specifications and color of the construction and decoration materials should meet the design requirements.

2) Different majors of construction teams such as construction team and installation team should cooperate with each other closely. Construction teams should have a comprehensive understanding of the relevant blueprints before construction or installation. When discovering the design mistake or changes during the construction, they should contact the design unit in time to discuss the solution in order to ensure the progress and quality of the project.

3) The specification and quality of material requirements of the key parts such as paintings should be confirmed by supervisor in order to ensure the quality of the project;

4) The dimensions of the building plan are structural size.

3: Architectural fireproof design

1) In order to satisfy the requirement of separation distance for fireproof, the distance between two single buildings should be larger than 9m;

2) Requirements for fire protection of steel structure are as follows

NO.	Component name	Fire resistance limit (H)	Types of fire retardant coatings	Remarks
1	Column and column support	2.0	Thick fireproof painting	Non expansive fire retardant painting
2	Beam and truss	1.50	Thin fireproof painting	Non expansive fire retardant painting
3	Roof bearing member, roof support and tie rod	1.00	Thin fireproof painting	Non expansive fire retardant painting

4: Construction instructions

1. Flooring

Floor construction practices

a. 50 mm concrete surface layer containing φ10@200 two-way rebar;

b. Rammed earth (Compaction coefficient 0.94);

2. Roof

2.1 General

The high-quality profiled steel roofing system is selected, including: waterproof, thermal insulation, wind resistance and so on

2.2 Roof construction practices

Profiled steel sheet roof structural layer (from top to bottom):

a. Roof panel: 0.8mm thick aluminium zinc profiled steel sheet roof panel, green color

b. Purlin: refer to structural design drawings

建筑设计说明

一、项目概况：

项目名称：巴基斯坦默蒂亚里—拉合尔 巴基斯坦默蒂亚里—拉合尔±660kV 直流输电工程/拉合尔±660kV 换流站

建设单位：国家电网/中国电力技术装备有限公司

单体名称	建筑层数	建筑高度	建筑面积	室内外高差
备用平抗室	1	6.47	80.1	0.45

结构形式：钢结构　　结构使用年限：50 年　耐火等级：二级

二、建筑施工注意事项：

1. 本工程建筑和装饰用料的选用，规格及色彩应满足设计要求。建筑饰面及装修材料规格和色彩应满足设计要求。
2. 土建施工队、安装施工队装饰等各专项施工队伍间、各专业间均应密切配合，施工或安装前先应全面清楚了解有关工种设计图纸内容要求（包括基础结构部份）。发现设计问题或现场有变化情况时，应及时与设计人员联系，协商确定解决方法，进而确保工程进度与施工质量。
3. 本项目工程建筑关键部分用料，如油漆和涂料等的规格和质量等要求，须经监理确认无误，以确保工程质量。
4. 建筑平面所注尺寸均为结构尺寸。

三、建筑消防设计：

1. 单体间间距均大于 9m，满足消防间距要求。
2. 钢结构防火要求如下：

序号	构件名称	耐火极限（h）	防火涂料类型	备注
1	柱、柱间支撑	2.0	厚涂型防火涂料	非膨胀性防火涂料
2	梁、桁架	1.5	薄涂型防火涂料	非膨胀性防火涂料
3	屋盖承重构件、屋面支撑、系杆	1.0	薄涂型防火涂料	非膨胀性防火涂料

四、建筑施工说明

1．地面构造做法

a. 50 厚混凝土整浇层，内配φ10@200 双向（与圈梁的接缝小于 20）

b. 素土夯实（夯实系数不小于 0.94）

2．屋面工程：

a. Main steel structure: refer to structural design drawings

2.3 detail node design

In the ridge of roof processing, aluminum alloy selection and type consistent seals and roof plate rib is fixedly connected with the roof waterproof rivets, foam and seal in squeezed and profile consistent with the seal, and then the roof plate with a rivet in the middle of the fixed and seal.

2.4 Wind resistant design

2.4.1 Laying plate direction

When considering the wind resistant design, should first consider the laying plate direction, the location of the project construction, the area of the dominant wind direction in which direction should make planking part of the back side of the wind

2.4.2 roof panel installation

compose type/self-tapping screw fixation/mounting area reinforcement/corner cutting and trimming.

3．Paint

3.1 Primer and finish painting of anticorrosive paint should be matched with each other

3.2 The ambient temperature should be between 5~38C, and the relative humidity should not be greater than 85% during painting

3.3 When the surface of the component has dew, it shall not be painted, and no rain in the 4 hours after painting

3.4 The steel structure component must clean the burr, rust, oil stain and adhesive on the surface of the component before brushing the antirust coating. The rust removing method adopts sand blasting and rust removing, and the grade should be Sa2.5.

3.5 Primer and topcoat materials should be in accordance withthe building fire protection regulations: generally should be painted 4~5 times

The total dry film thickness of the exterior component painting is not less than 150um

The total thickness of dry film for interior component painting is ot less than 120um

4. Else:

4.1 Lightning protection facilities: refer to detail of electrical drawings

4.2 Electrical, hydraulic, HVAC and other specialty's reserve holes, refer to relevant drawings.

4.3 If there are any contradictions on any drawings, contact the designer before construction. In the event of a difference between the Chinese and English versions, the Chinese version shall prevail.

2.1 概述：选用压型钢板屋面系统，主要包括：防水、保温、抗风等方面。

2.2 构造

1、压型钢板屋面构造层

a. 屋面板：0.8mm 厚 65/400 型镀铝锌压型钢板屋面板，颜色绿色

b. 檩条：详见结构图纸

c. 原钢主体结构：详见结构图纸

2.3 节点设计：在屋脊的处理上，选用与板型相吻合的铝合金配套密封件与屋面板肋用防水铆钉连接固定，并在密封件后塞入与板型相一致的屋脊泡沫密封条，然后将屋脊盖板与密封件用铆钉在中间固定。

2.4 抗风设计

2.4.1. 铺板方向：在考虑抗风设计的时候，首先应考虑铺板的方向，在工程所在地施工时，该地区的主导风向在哪个方向，铺板时应让大边部分背对风向。

2.4.2. 安装：排板/自攻螺丝固定/搭接部位加固/边角部位切割修整。

3. 油漆涂料

3.1. 防腐涂料的底漆和面漆应相互配套。

3.2. 涂装时环境温度应在 5~38° C 间，相对湿度不应大于 85%。

3.3. 构件表面有结露时不得涂装，涂装后 4h 内不得淋雨。

3.4. 钢结构构件在涂刷防锈蚀涂料前必须将构件表面的毛刺、铁锈、油污及附着物清除干净，除锈方法采用喷砂抛丸除锈，等级应达到 Sa2.5。

3.5. 底漆及面漆材料应配合建筑防火规定：一般应涂装 4~5 遍

室外构件涂层配套漆膜干膜总厚度不低于 150um

室内构件涂层配套漆膜干膜总厚度不低于 120um

4. 其它

4.1 防雷设施：详电施图纸

4.2 建筑图纸中各专业综合留洞示意图后出，电气、水工、暖通等专业留孔大小及位置详见各专业图纸（以各专业图纸为准）。

4.3 任何图纸上有矛盾与疑问之处，要在着手工作之前报请建筑师和工程师澄清如出现中英文版本不一致的情况，以中文版为准。

说明：

1、备用平抗线圈外径 4620mm，高度 4064mm，平抗附件待使用时再安装。

2、本站共设 1 台备用平抗，单台平抗线圈重量 50 吨，受风面积约 20m。

3、备用平抗室屋顶采用可拆卸式，以方便平抗吊装。

Description:

1, secondary flat coil diameter 4620 mm, 4064 mm, flat attachment to install again when using.

2. A standby flat resistance is set up in this station, with a single flat coil weight of 50 tons and a wind area of about 20m.

3. The spare flat roof can be disassembled to facilitate the lifting of the hoisting.

专业 Speciality	会签 Sign	日期 Date
结构 Structure	赵俊	2019.09.06
电气 Electrical	乎红亭	2019.09.06
暖通 HVAC	毛俊芳	2019.09.06
给排水 Water supply and drainage	朱晨晓	2019.09.06

Reference Drawings

Drwg. No.	Title
30-B003701S-T0248	建筑通用详图 General details of the building

Revisions	Name	Date	Notes
A	刘帅	2017.11.30	第一版 First Edition

巴基斯坦默蒂亚里—拉合尔±660kV直流输电工程

±660kV HVDC Project from Matiari to Lahore in Pakistan

NATIONAL TRANSMISSION & DESPATCH COMPANY (NTDC) LIMITED PAKISTAN

CONTRACTOR 国家电网 STATE GRID 中国电力技术装备有限公司 CHINA ELECTRIC POWER EQUIPMENT AND TECHNOLOGY CO.,LTD.

SUBCONTRACTOR East China Electric Power Design Institute Co.,Ltd.

拉合尔±660kV换流站

±660kV Lahore Converter Station

设计阶段 PHASE: 施工图 Detailed Design

M L H V D C - L C S - E C I - D D - C A - 0 2 1 6 - 0 0 1 B

	姓名 Name	日期 Date
设计 Designed	刘帅	2019.09.06
校核 Checked	解海	2019.09.06
审核 Reviewed	王俊	2019.09.06
批准 Approved	黄文峰	2019.09.06

备用平抗室建筑图

Architectrual drawing of Standby smoothing reactor house

比例 Scale: 1:100　图号 DWG NO.: 30-B003701S-T0216-001　版本 REV.: B

594X841